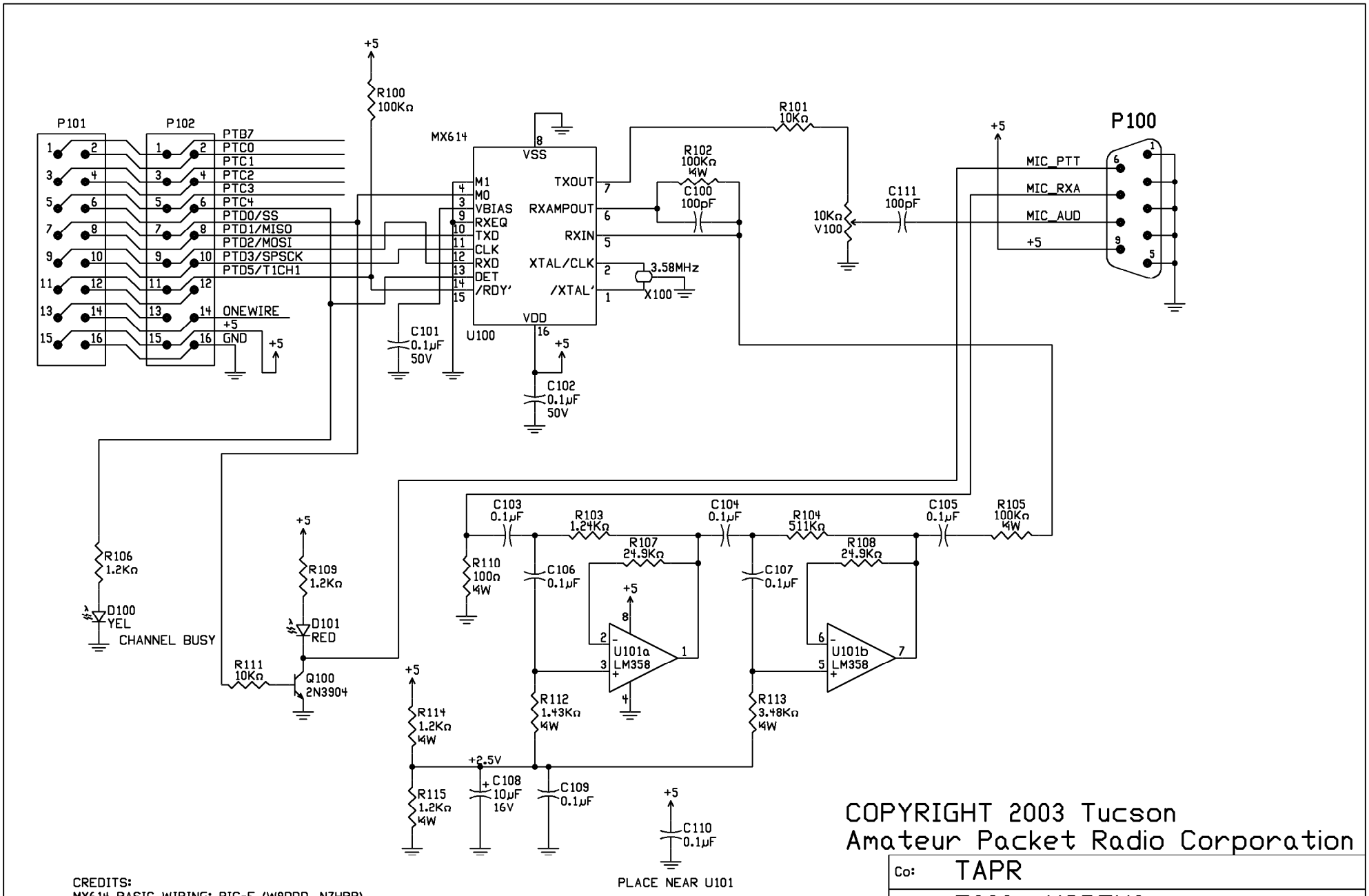

CREDITS:
MX614 BASIC WIRING: PIC-E (W9DDD, N7HPR)
MX614 Rx FILTER: TNC-X (W2FS)

COPYRIGHT 2003 Tucson
Amateur Packet Radio Corporation

Co:	TAPR		
Title:	T238+ MODEM2		
CAD:	WILL BEALS N0XGA	Revision:	A
Design:	WILL BEALS N0XGA	Size:	A
Date:	NOV 23 2003	Sheet	1 of 1